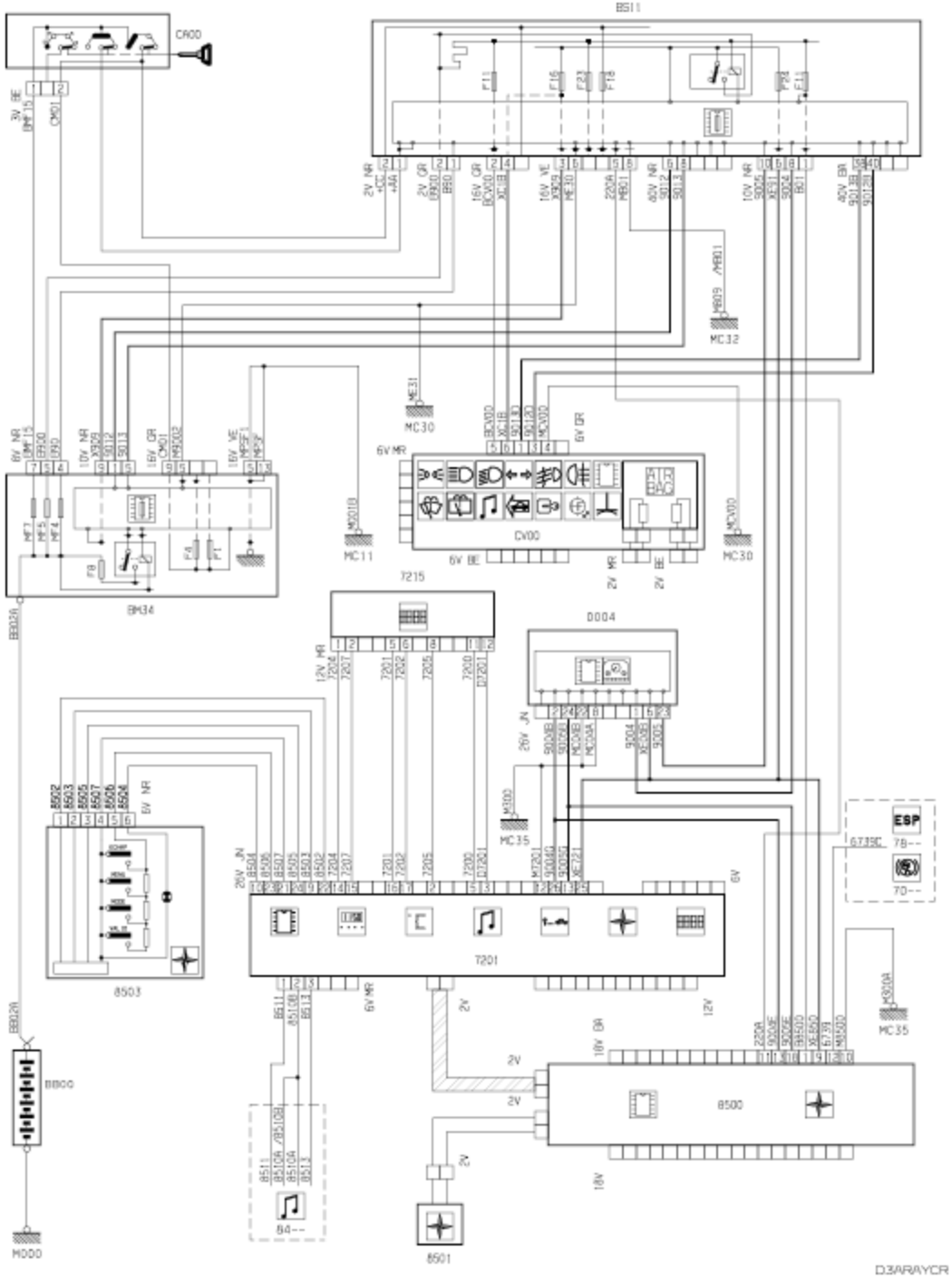
CR00
BS11
BM34
CV00
D004
7201
8500
8501
8503
B800
M000
MC11
MC30
MC31
MC32
MC35
ESP
D3ARAYCR