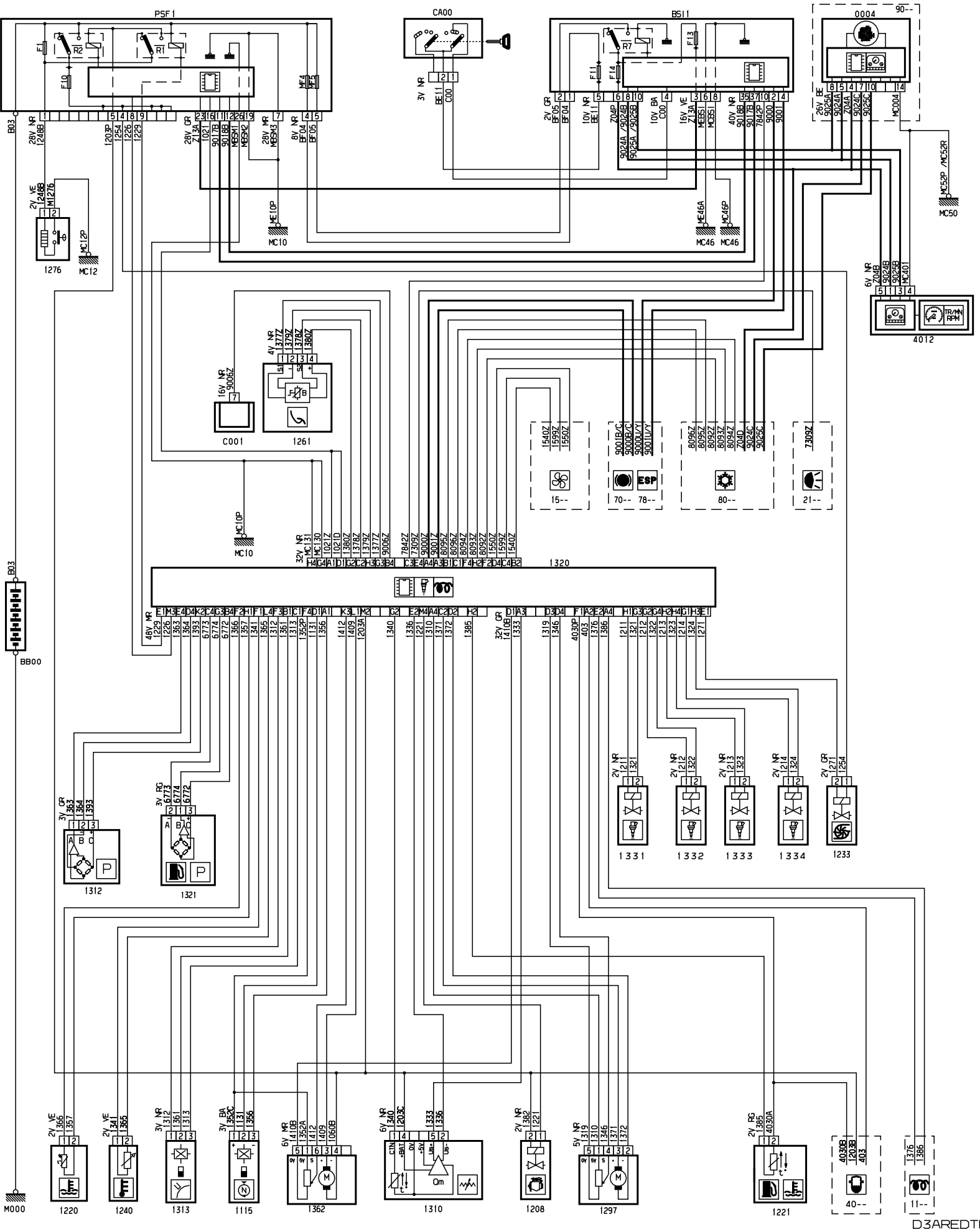
PSF1
CA00
BS11
0004
90--
1276
MC12
MC10
MC46
MC50
4012
C001
1261
15--
70--
78--
80--
21--
1320
BB00
M000
1312
1321
1331
1332
1333
1334
1233
1220
1240
1313
1115
1362
1310
1208
1297
1221
40--
11--
D3AREDTR