автомобиль : C4 PICASSO		номер VIN: VF7UDRFJH45155763 / OPR : 11209	
область	силовой агрегат	функция	электронный впрыск
составные части			

принцип

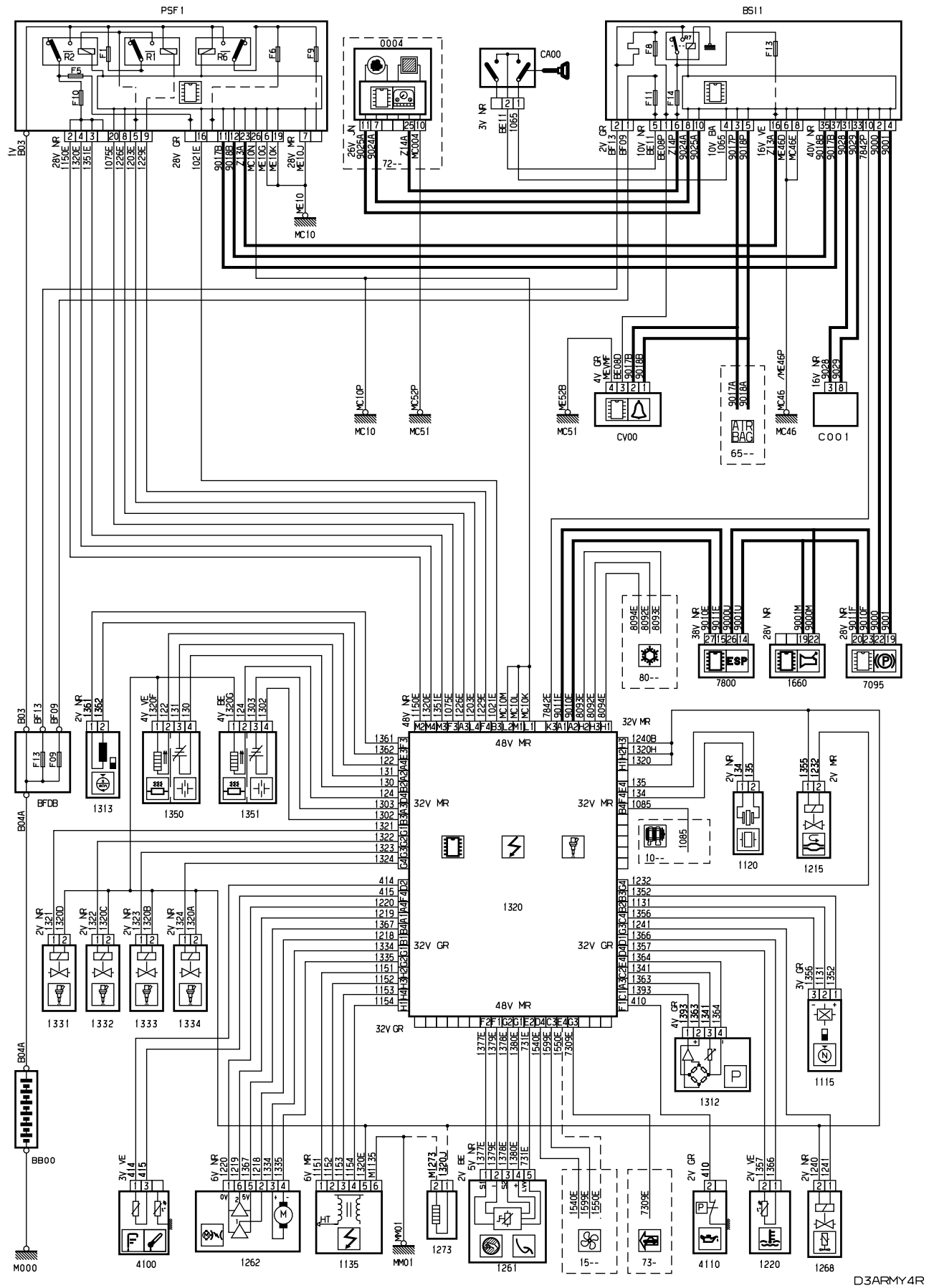

прокладка трубопроводов (кабелей, тросов)

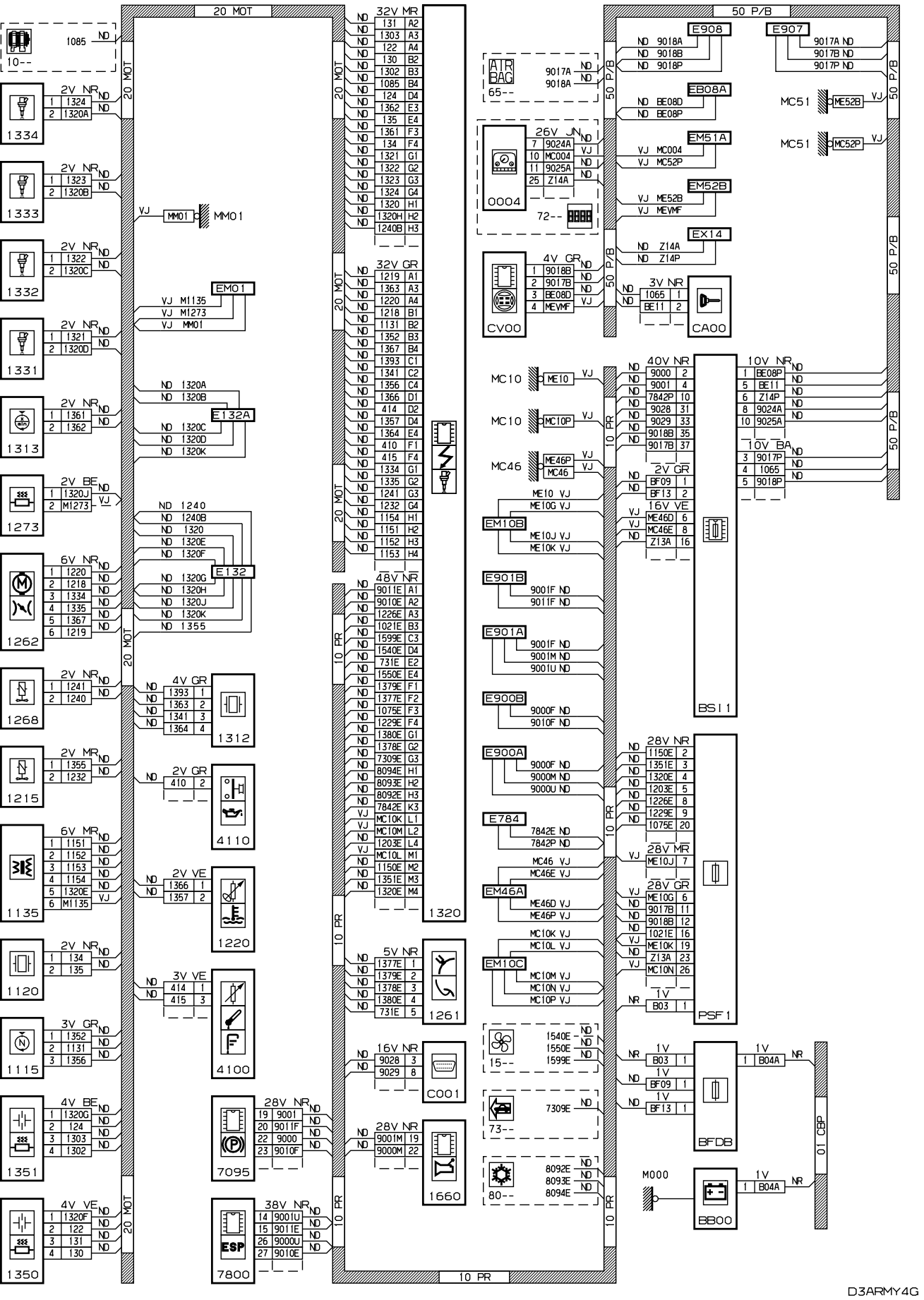
20 MOT
10 PR
50 P/B
01 CBP
1085 ND
10--
2V NR
1324 ND
1320A ND
1334
1323 ND
1320B ND
1333
1322 ND
1320C ND
1332
1321 ND
1320D ND
1331
1361 ND
1362 ND
1313
2V BE
1320J ND
M1273 VJ
1273
6V NR
1220 ND
1218 ND
1334 ND
1335 ND
1367 ND
1219 ND
1262
2V NR
1241 ND
1240 ND
1268
2V MR
1355 ND
1232 ND
1215
6V MR
1151 ND
1152 ND
1153 ND
1154 ND
1320E VJ
M1135 VJ
1135
2V NR
134 ND
135 ND
1120
3V GR
1352 ND
1131 ND
1356 ND
1115
4V BE
1320G ND
124 ND
1303 ND
1302 ND
1351
4V VE
1320F ND
122 ND
131 ND
130 ND
1350
VJ MM01 MM01
EM01
VJ M1135
VJ M1273
VJ MM01
ND 1320A
ND 1320B
E132A
ND 1320C
ND 1320D
ND 1320K
ND 1240
ND 1240B
ND 1320
ND 1320E
ND 1320F
E132
ND 1320G
ND 1320H
ND 1320J
ND 1320K
ND 1355
4V GR
1393 ND
1363 ND
1341 ND
1364 ND
1312
2V GR
410 ND
4110
2V VE
1366 ND
1357 ND
1220
3V VE
414 ND
415 ND
4100
28V NR
19 9001 ND
20 9011F ND
22 9000 ND
23 9010F ND
7095
38V NR
14 9001U ND
15 9011E ND
26 9000U ND
27 9010E ND
ESP
7800
32V MR
131 A2
1303 A3
122 A4
130 B2
1302 B3
1085 B4
124 D4
1362 E3
135 E4
1361 F3
134 F4
1321 G1
1322 G2
1323 G3
1324 G4
1320 H1
1320H H2
1240B H3
32V GR
1219 A1
1363 A3
1220 A4
1218 B1
1131 B2
1352 B3
1367 B4
1393 C1
1341 C2
1356 C4
1366 D1
414 D2
1357 D4
1364 E4
410 F1
415 F4
1334 G1
1335 G2
1241 G3
1232 G4
1154 H1
1151 H2
1152 H3
1153 H4
48V NR
9011E A1
9010E A2
1226E A3
1021E B3
1599E C3
1540E D4
731E E2
1550E E4
1379E F1
1377E F2
1075E F3
1229E F4
1380E G1
1378E G2
7309E G3
8094E H1
8093E H2
8092E H3
7842E K3
MC10K L1
MC10M L2
1203E L4
MC10L M1
1150E M2
1351E M3
1320E M4
1320
5V NR
1377E 1
1379E 2
1378E 3
1380E 4
731E 5
1261
16V NR
9028 3
9029 8
C001
28V NR
9001M 19
9000M 22
1660
ATR BAG
65--
9017A ND
9018A ND
26V JN
7 9024A ND
10 MC004 VJ
11 9025A ND
25 Z14A ND
0004
72--
4V GR
1 9018B ND
2 9017B ND
3 BE08D ND
4 MEVMF VJ
CV00
E908
ND 9018A
ND 9018B
ND 9018P
E907
9017A ND
9017B ND
9017P ND
EB08A
ND BE08D
ND BE08P
MC51 ME52B VJ
EM51A
VJ MC004
VJ MC52P
MC51 MC52P VJ
EM52B
VJ ME52B
VJ MEVMF
EX14
ND Z14A
ND Z14P
3V NR
ND 1065 1
ND BE11 2
CA00
MC10 ME10 VJ
MC10 MC10P VJ
MC46 ME46P VJ
MC46 VJ
40V NR
ND 9000 2
ND 9001 4
ND 7842P 10
ND 9028 31
ND 9029 33
ND 9018B 35
ND 9017B 37
2V GR
ND BF09 1
ND BF13 2
16V VE
VJ ME46D 6
VJ MC46E 8
ND Z13A 16
10V NR
1 BE08P ND
5 BE11 ND
6 Z14P ND
8 9024A ND
10 9025A ND
10V BA
3 9017P ND
4 1065 ND
5 9018P ND
BS11
ME10 VJ
ME10G VJ
EM10B
ME10J VJ
ME10K VJ
E901B
9001F ND
9011F ND
E901A
9001F ND
9001M ND
9001U ND
E900B
9000F ND
9010F ND
E900A
9000F ND
9000M ND
9000U ND
E784
7842E ND
7842P ND
MC46 VJ
MC46E VJ
EM46A
ME46D VJ
ME46P VJ
MC10K VJ
MC10L VJ
EM10C
MC10M VJ
MC10N VJ
MC10P VJ
28V NR
1150E 2
1351E 3
1320E 4
1203E 5
1226E 8
1229E 9
1075E 20
28V MR
VJ ME10J 7
28V GR
VJ ME10G 6
ND 9017B 11
ND 9018B 12
ND 1021E 16
VJ ME10K 19
ND Z13A 23
VJ MC10N 26
1V
NR B03 1
PSF1
15--
1540E ND
1550E ND
1599E ND
73--
7309E ND
80--
8092E ND
8093E ND
8094E ND
1V
NR B03 1
ND BF09 1
ND BF13 1
BFDB
1V
1 B04A NR
M000
BB00
D3ARMY4G

null

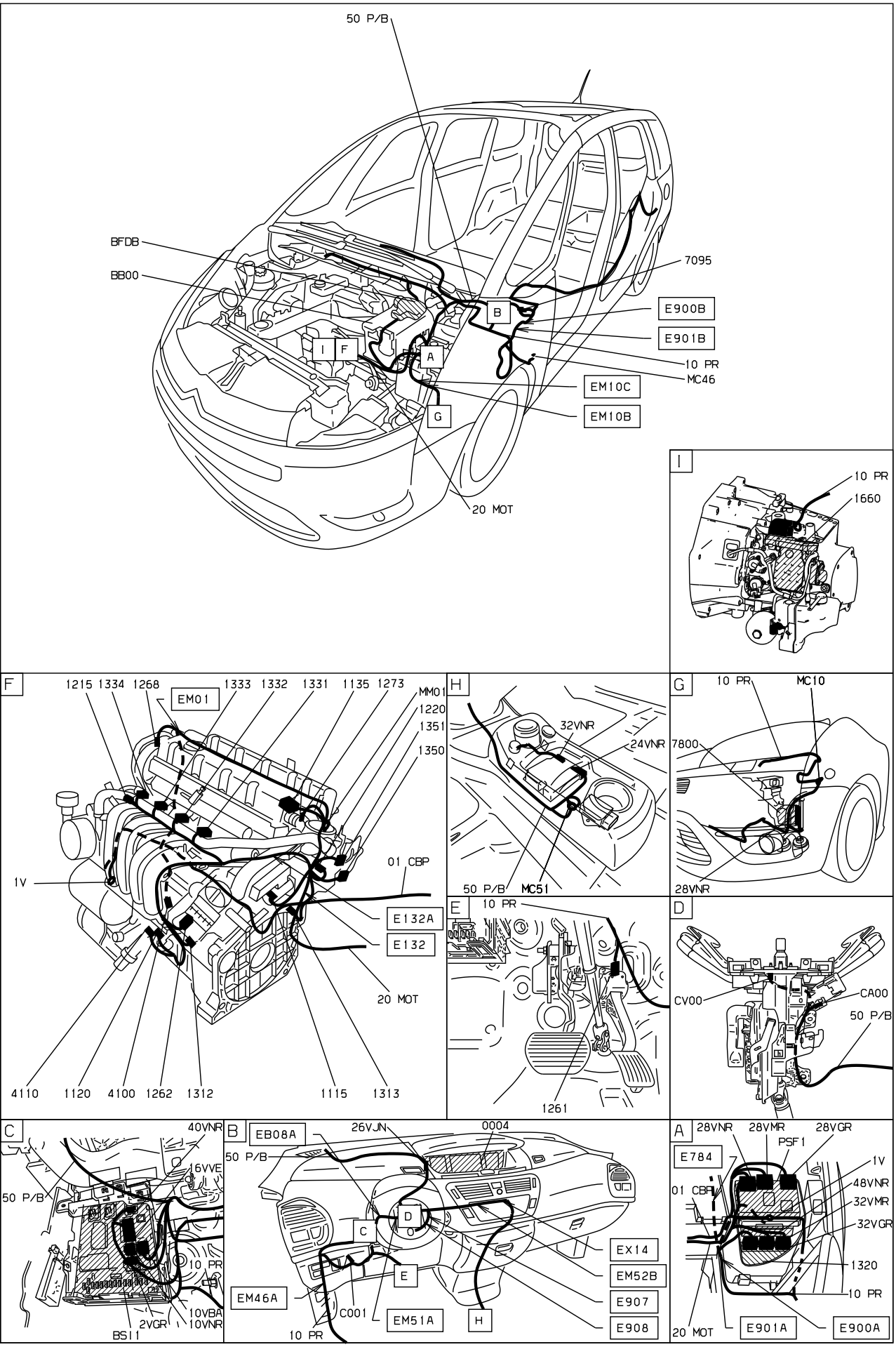

D3ARMY41

собственность PSA Peugeot Citroen