автомобиль : C5 II		**номер VIN: VF7RCRFJF76784319 / OPR : 10915**	
область	**силовой агрегат**	**функция**	**автоматическая коробка передач**
составные части			

принцип

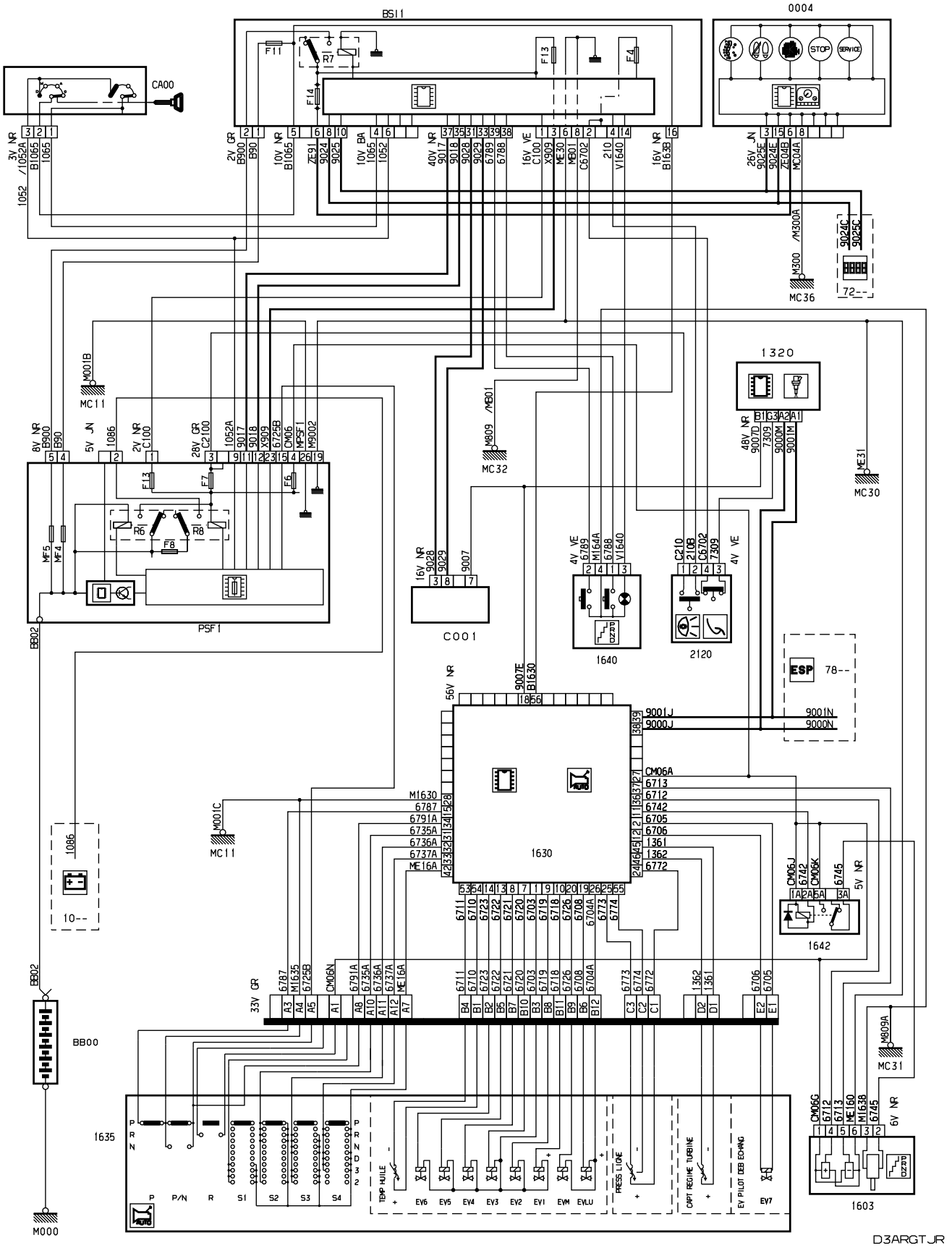

прокладка трубопроводов (кабелей, тросов)

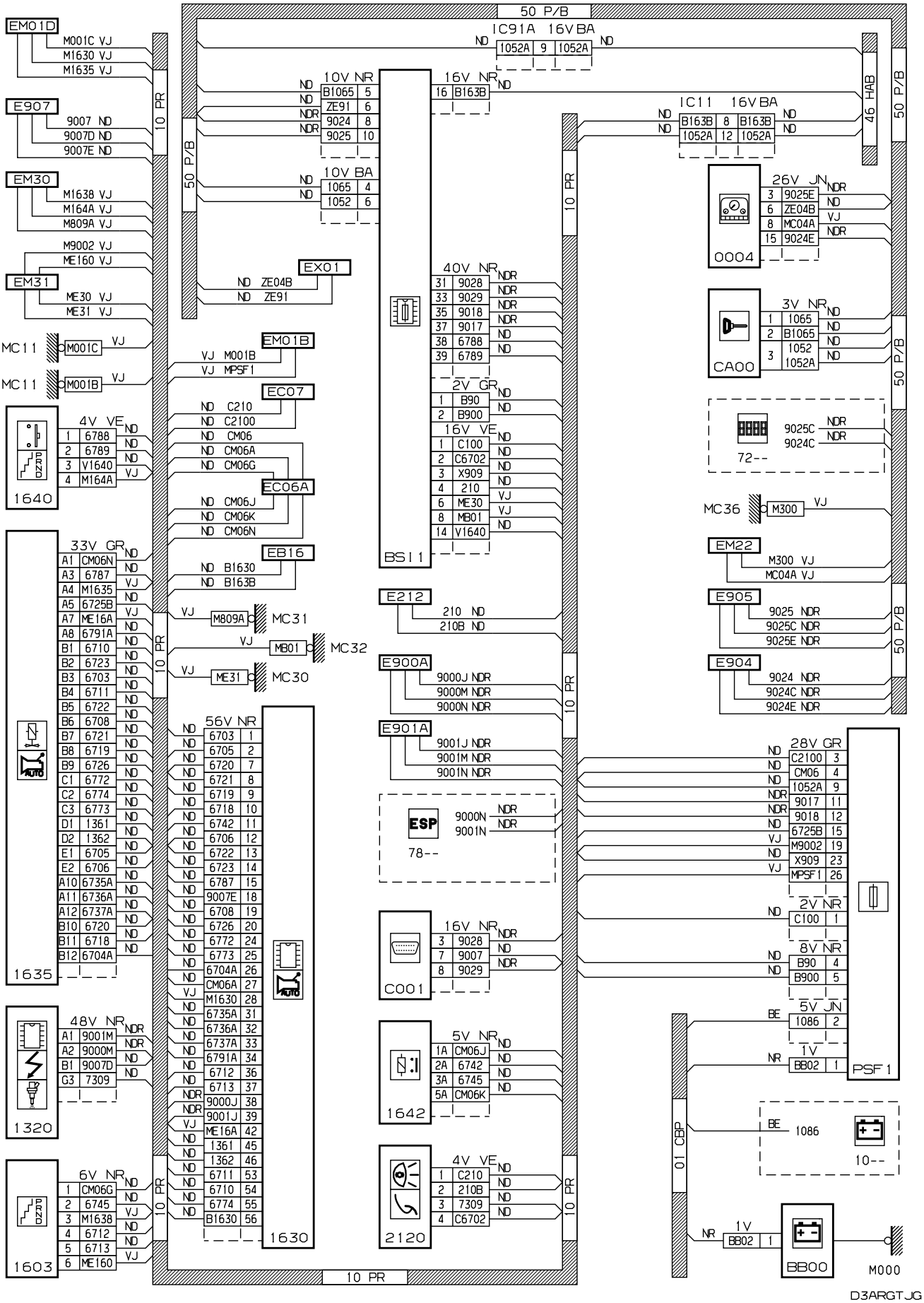
50 P/B
IC91A 16V BA
ND 1052A 9 1052A ND
EM01D
M001C VJ
M1630 VJ
M1635 VJ
E907
9007 ND
9007D ND
9007E ND
EM30
M1638 VJ
M164A VJ
M809A VJ
M9002 VJ
ME160 VJ
EM31
ME30 VJ
ME31 VJ
10 PR
10V NR
ND B1065 5
ND ZE91 6
NDR 9024 8
NDR 9025 10
10V BA
ND 1065 4
ND 1052 6
EX01
ND ZE04B
ND ZE91
16V NR
16 B163B ND
IC11 16V BA
ND B163B 8 B163B ND
ND 1052A 12 1052A ND
46 HAB
26V JN
3 9025E NDR
6 ZE04B ND
8 MC04A VJ
15 9024E NDR
0004
40V NR
31 9028 NDR
33 9029 NDR
35 9018 NDR
37 9017 ND
38 6788 ND
39 6789 ND
3V NR
1 1065 ND
2 B1065 ND
3 1052 ND
1052A ND
CA00
MC11 M001C VJ
MC11 M001B VJ
VJ M001B
VJ MPSF1
EM01B
EC07
ND C210
ND C2100
ND CM06
ND CM06A
ND CM06G
EC06A
ND CM06J
ND CM06K
ND CM06N
4V VE
1 6788 ND
2 6789 ND
3 V1640 ND
4 M164A VJ
1640
2V GR
1 B90 ND
2 B900 ND
16V VE
1 C100 ND
2 C6702 ND
3 X909 ND
4 210 VJ
6 ME30 VJ
8 MB01 ND
14 V1640 ND
BS11
9025C NDR
9024C NDR
72--
MC36 M300 VJ
EM22
M300 VJ
MC04A VJ
33V GR
A1 CM06N ND
A3 6787 ND
A4 M1635 VJ
A5 6725B ND
A7 ME16A VJ
A8 6791A ND
B1 6710 ND
B2 6723 ND
B3 6703 ND
B4 6711 ND
B5 6722 ND
B6 6708 ND
B7 6721 ND
B8 6719 ND
B9 6726 ND
C1 6772 ND
C2 6774 ND
C3 6773 ND
D1 1361 ND
D2 1362 ND
E1 6705 ND
E2 6706 ND
A10 6735A ND
A11 6736A ND
A12 6737A ND
B10 6720 ND
B11 6718 ND
B12 6704A ND
1635
EB16
ND B1630
ND B163B
VJ M809A MC31
VJ MB01 MC32
VJ ME31 MC30
E212
210 ND
210B ND
E905
9025 NDR
9025C NDR
9025E NDR
E900A
9000J NDR
9000M NDR
9000N NDR
E904
9024 NDR
9024C NDR
9024E NDR
E901A
9001J NDR
9001M NDR
9001N NDR
56V NR
ND 6703 1
ND 6705 2
ND 6720 7
ND 6721 8
ND 6719 9
ND 6718 10
ND 6742 11
ND 6706 12
ND 6722 13
ND 6723 14
ND 6787 15
ND 9007E 18
ND 6708 19
ND 6726 20
ND 6772 24
ND 6773 25
ND 6704A 26
ND CM06A 27
VJ M1630 28
ND 6735A 31
ND 6736A 32
ND 6737A 33
ND 6791A 34
ND 6712 36
ND 6713 37
NDR 9000J 38
NDR 9001J 39
VJ ME16A 42
ND 1361 45
ND 1362 46
ND 6711 53
ND 6710 54
ND 6774 55
ND B1630 56
1630
ESP
9000N NDR
9001N NDR
78--
28V GR
ND C2100 3
ND CM06 4
ND 1052A 9
NDR 9017 11
NDR 9018 12
ND 6725B 15
VJ M9002 19
ND X909 23
VJ MPSF1 26
2V NR
ND C100 1
8V NR
ND B90 4
ND B900 5
5V JN
BE 1086 2
1V
NR BB02 1
PSF1
16V NR
3 9028 NDR
7 9007 ND
8 9029 NDR
C001
5V NR
1A CM06J ND
2A 6742 ND
3A 6745 ND
5A CM06K ND
1642
4V VE
1 C210 ND
2 210B ND
3 7309 ND
4 C6702 ND
2120
48V NR
A1 9001M NDR
A2 9000M NDR
B1 9007D ND
G3 7309 ND
1320
6V NR
1 CM06G ND
2 6745 ND
3 M1638 VJ
4 6712 ND
5 6713 ND
6 ME160 VJ
1603
01 CBP
BE 1086
10--
NR 1V BB02 1
BB00
M000
D3ARGTJG

null

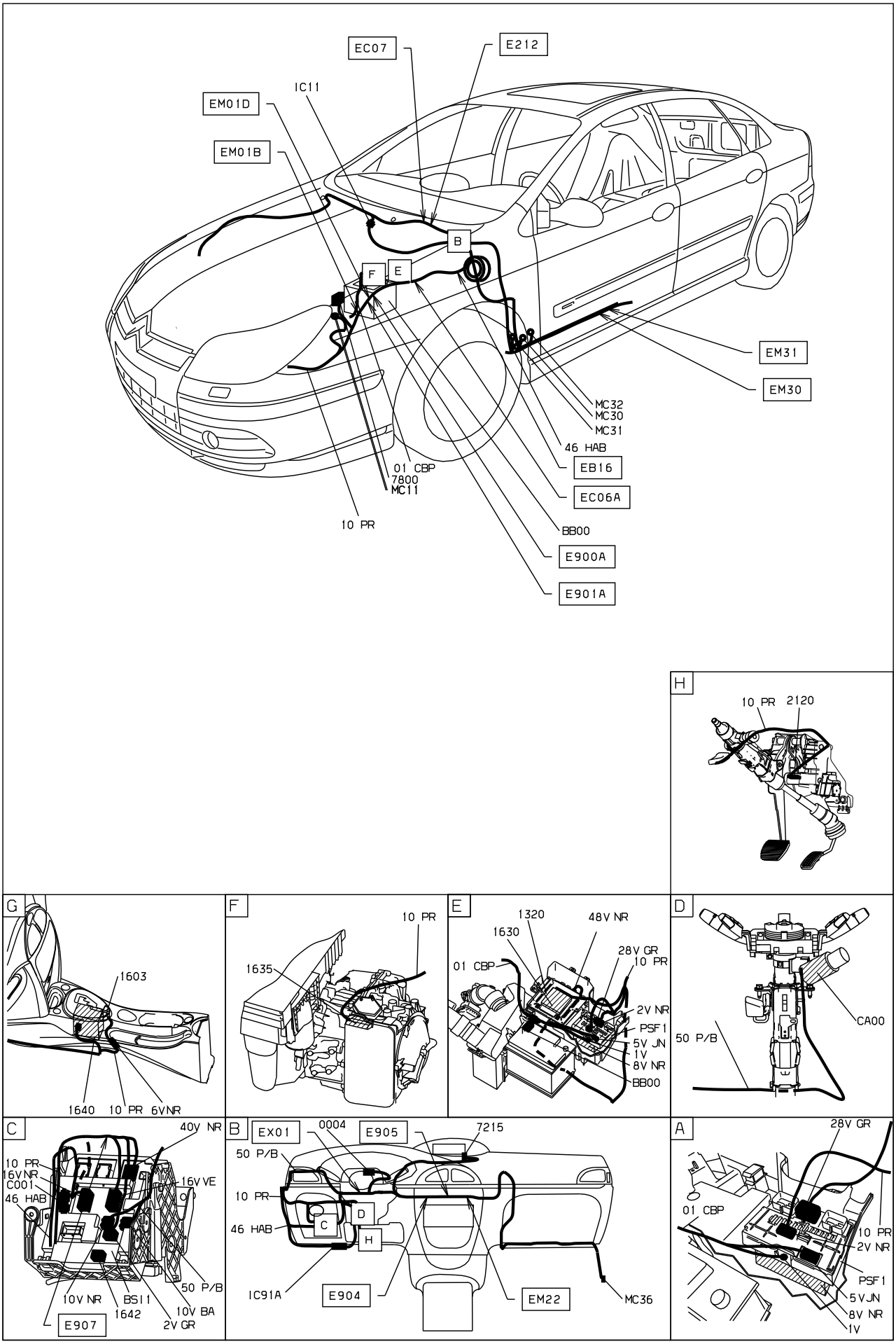

D3ARGTJ1

собственность PSA Peugeot Citroen

26/07/2023