автомобиль : C5 (X7)		номер VIN: VF7RWRHRJ9L502567 / OPR : 11748	
область	система помощи при вождении	функция	электрический стояночный тормоз
составные части			

принцип

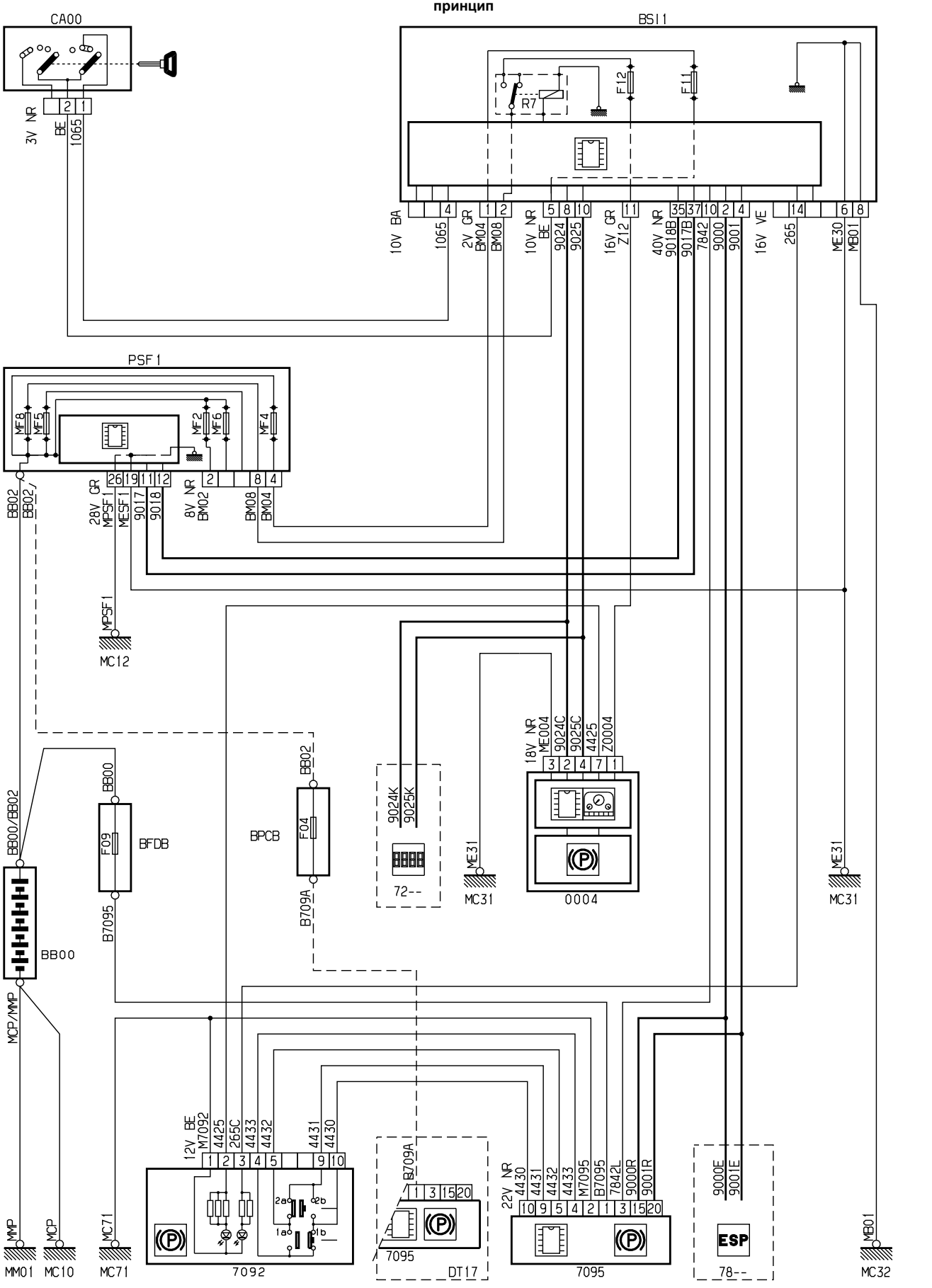

D3ARQ8NR

прокладка трубопроводов (кабелей, тросов)

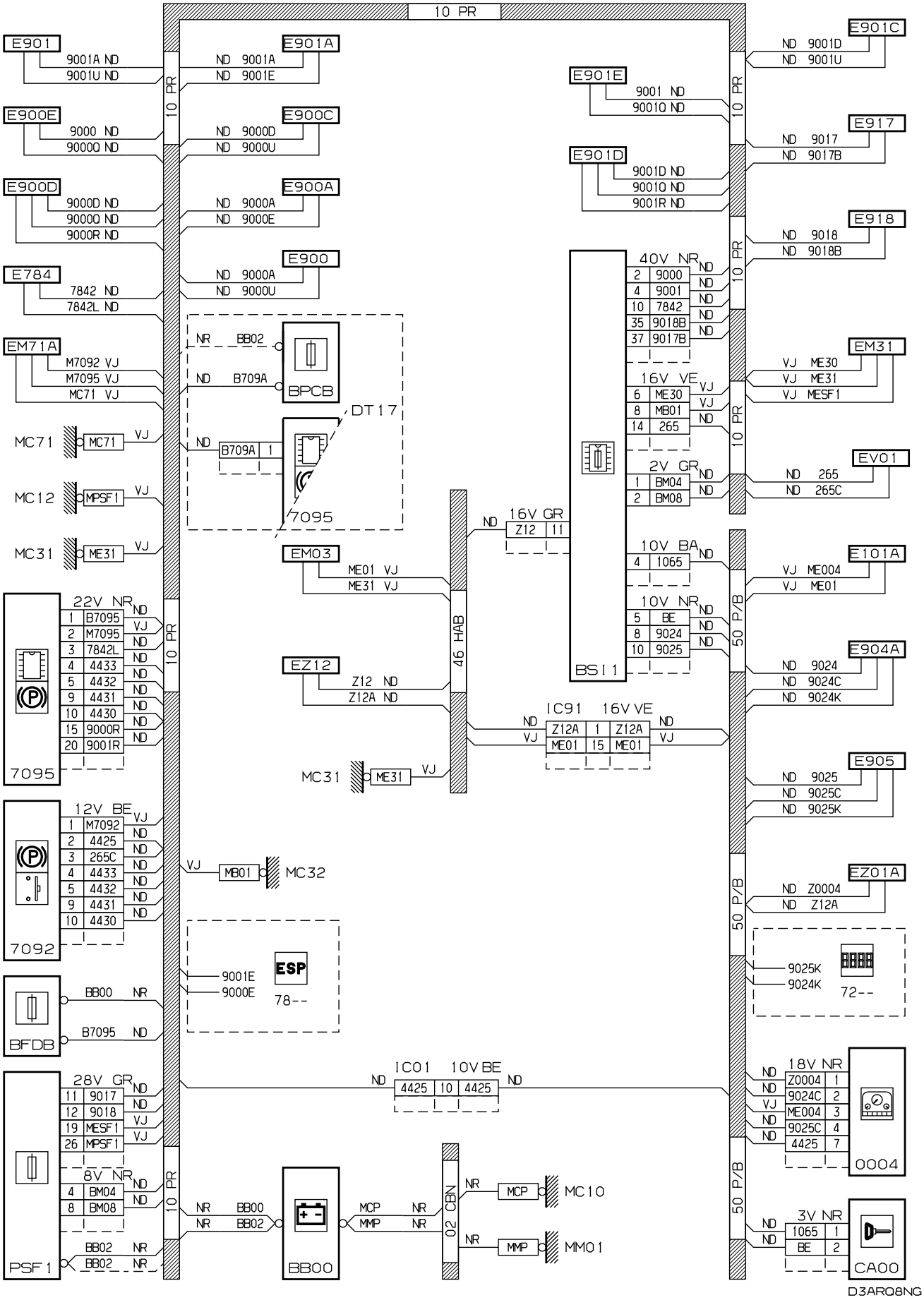
10 PR
E901
9001A ND
9001U ND
E901A
ND 9001A
ND 9001E
E900E
9000 ND
9000Q ND
E900C
ND 9000D
ND 9000U
E900D
9000D ND
9000Q ND
9000R ND
E900A
ND 9000A
ND 9000E
E900
ND 9000A
ND 9000U
E784
7842 ND
7842L ND
EM71A
M7092 VJ
M7095 VJ
MC71 VJ
NR BB02
ND B709A
BPCB
DT17
ND B709A 1
7095
MC71
MC71 VJ
MC12
MPSF1 VJ
MC31
ME31 VJ
EM03
ME01 VJ
ME31 VJ
EZ12
Z12 ND
Z12A ND
MC31
ME31 VJ
22V NR
1 B7095 ND
2 M7095 VJ
3 7842L ND
4 4433 ND
5 4432 ND
9 4431 ND
10 4430 ND
15 9000R ND
20 9001R ND
7095
12V BE
1 M7092 VJ
2 4425 ND
3 265C ND
4 4433 ND
5 4432 ND
9 4431 ND
10 4430 ND
7092
VJ MB01 MC32
9001E
9000E
ESP
78--
BFDB
BB00 NR
B7095 ND
28V GR
11 9017 ND
12 9018 ND
19 MESF1 VJ
26 MPSF1 VJ
8V NR
4 BM04 ND
8 BM08 ND
PSF1
BB02 NR
BB02 NR
NR BB00
NR BB02
BB00
MCP NR
MMP NR
02 CBN
NR MCP MC10
NR MMP MM01
ND 16V GR
Z12 11
46 HAB
ND
VJ
IC91 16V VE
Z12A 1 Z12A
ME01 15 ME01
ND
VJ
ND IC01 10V BE ND
4425 10 4425
E901E
9001 ND
9001Q ND
E901D
9001D ND
9001Q ND
9001R ND
40V NR
2 9000 ND
4 9001 ND
10 7842 ND
35 9018B ND
37 9017B ND
16V VE
6 ME30 VJ
8 MB01 VJ
14 265 ND
2V GR
1 BM04 ND
2 BM08 ND
10V BA
4 1065 ND
10V NR
5 BE ND
8 9024 ND
10 9025 ND
BSI1
50 P/B
E901C
ND 9001D
ND 9001U
E917
ND 9017
ND 9017B
E918
ND 9018
ND 9018B
EM31
VJ ME30
VJ ME31
VJ MESF1
EV01
ND 265
ND 265C
E101A
VJ ME004
VJ ME01
E904A
ND 9024
ND 9024C
ND 9024K
E905
ND 9025
ND 9025C
ND 9025K
EZ01A
ND Z0004
ND Z12A
9025K
9024K
72--
18V NR
ND Z0004 1
ND 9024C 2
VJ ME004 3
ND 9025C 4
ND 4425 7
0004
3V NR
ND 1065 1
ND BE 2
CA00
D3ARQ8NG

null

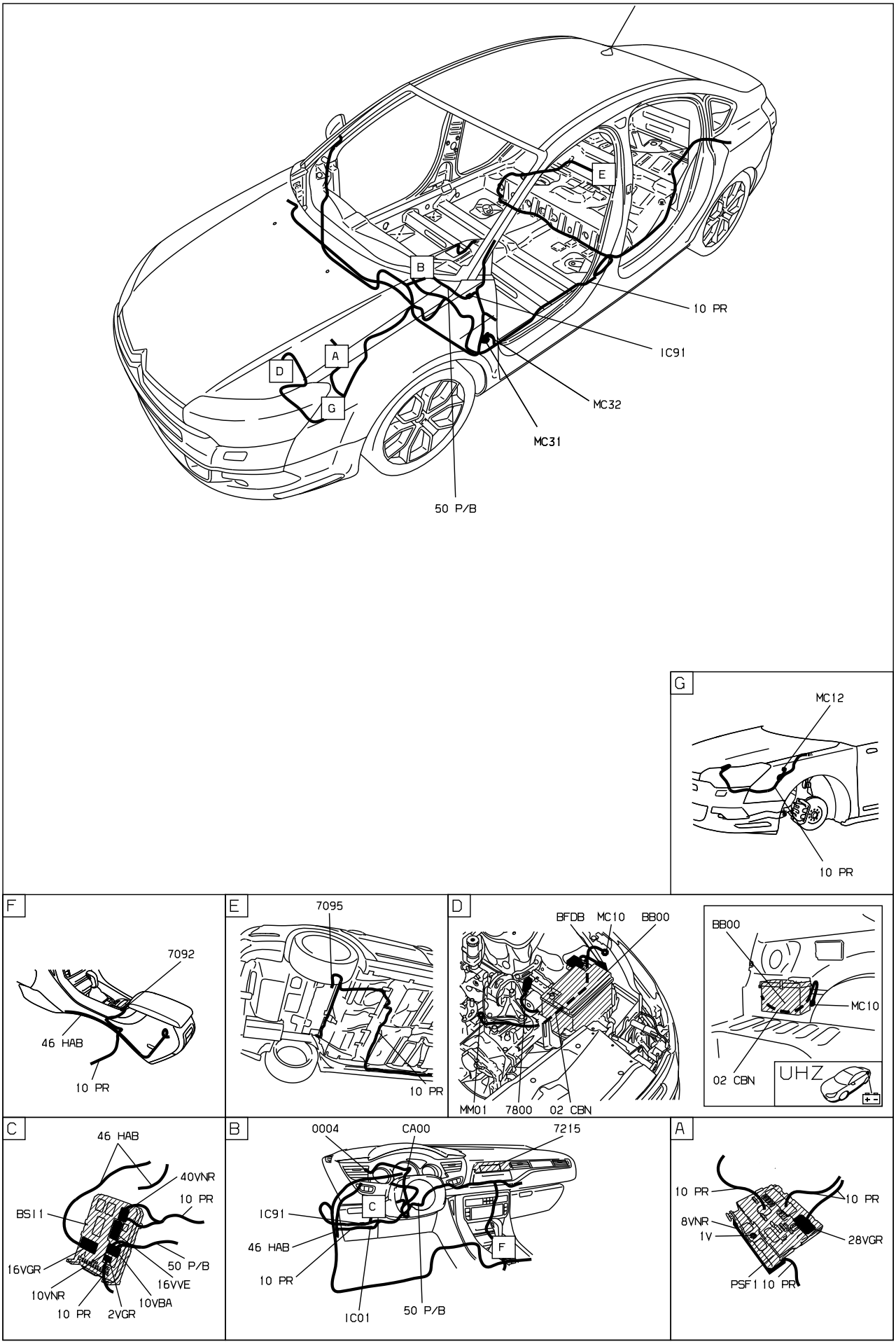

D3ARQ8N1

собственность PSA Peugeot Citroen

21/02/2023