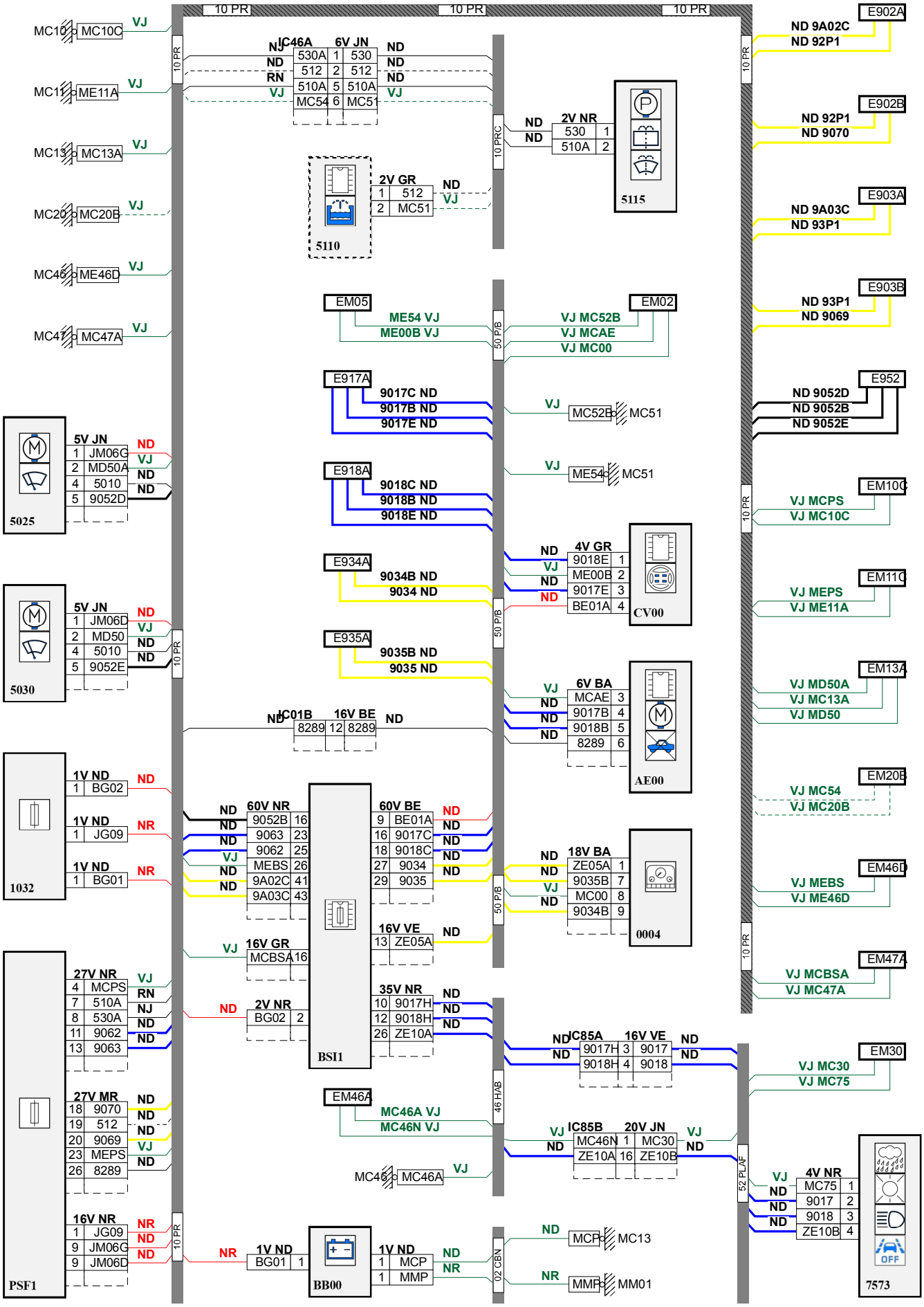
10 PR
10 PRC
50 P/B
46 HAB
52 PLAF
02 CBN
MC10 MC10C VJ
MC11 ME11A VJ
MC13 MC13A VJ
MC20 MC20B VJ
MC46 ME46D VJ
MC47 MC47A VJ
IC46A 6V JN
530A 1 530
512 2 512
510A 5 510A
MC54 6 MC51
2V NR
530 1
510A 2
5115
2V GR
512 1
MC51 2
5110
E902A ND 9A02C ND 92P1
E902B ND 92P1 ND 9070
E903A ND 9A03C ND 93P1
E903B ND 93P1 ND 9069
E952 ND 9052D ND 9052B ND 9052E
EM10C VJ MCPS VJ MC10C
EM11C VJ MEPS VJ ME11A
EM13A VJ MD50A VJ MC13A VJ MD50
EM20B VJ MC54 VJ MC20B
EM46D VJ MEBS VJ ME46D
EM47A VJ MCBSA VJ MC47A
EM30 VJ MC30 VJ MC75
EM05 ME54 VJ ME00B VJ
EM02 VJ MC52B VJ MCAE VJ MC00
E917A 9017C ND 9017B ND 9017E ND
VJ MC52B MC51
E918A 9018C ND 9018B ND 9018E ND
VJ ME54 MC51
E934A 9034B ND 9034 ND
E935A 9035B ND 9035 ND
4V GR
9018E 1
ME00B 2
9017E 3
BE01A 4
CV00
6V BA
MCAE 3
9017B 4
9018B 5
8289 6
AE00
IC01B 16V BE
8289 12 8289
18V BA
ZE05A 1
9035B 7
MC00 8
9034B 9
0004
5025
5V JN
JM06G
MD50A
5010
9052D
5030
5V JN
JM06D
MD50
5010
9052E
1032
1V ND BG02
1V ND JG09
1V ND BG01
PSF1
27V NR
MCPS 4
510A 7
530A 8
9062 11
9063 13
27V MR
9070 18
512 19
9069 20
MEPS 23
8289 26
16V NR
JG09 1
JM06G 9
JM06D 9
BSI1
60V NR
9052B 16
9063 23
9062 25
MEBS 26
9A02C 41
9A03C 43
60V BE
BE01A 9
9017C 16
9018C 18
9034 27
9035 29
16V VE
ZE05A 13
16V GR
MCBSA 16
2V NR
BG02 2
35V NR
9017H 10
9018H 12
ZE10A 26
IC85A 16V VE
9017H 3 9017
9018H 4 9018
EM46A MC46A VJ MC46N VJ
MC46 MC46A VJ
IC85B 20V JN
MC46N 1 MC30
ZE10A 16 ZE10B
4V NR
MC75 1
9017 2
9018 3
ZE10B 4
7573
BB00
1V ND BG01 1
1V ND
MCP 1
MMP 1
MCP MC13
MMP MM01
D3CZ8L8G