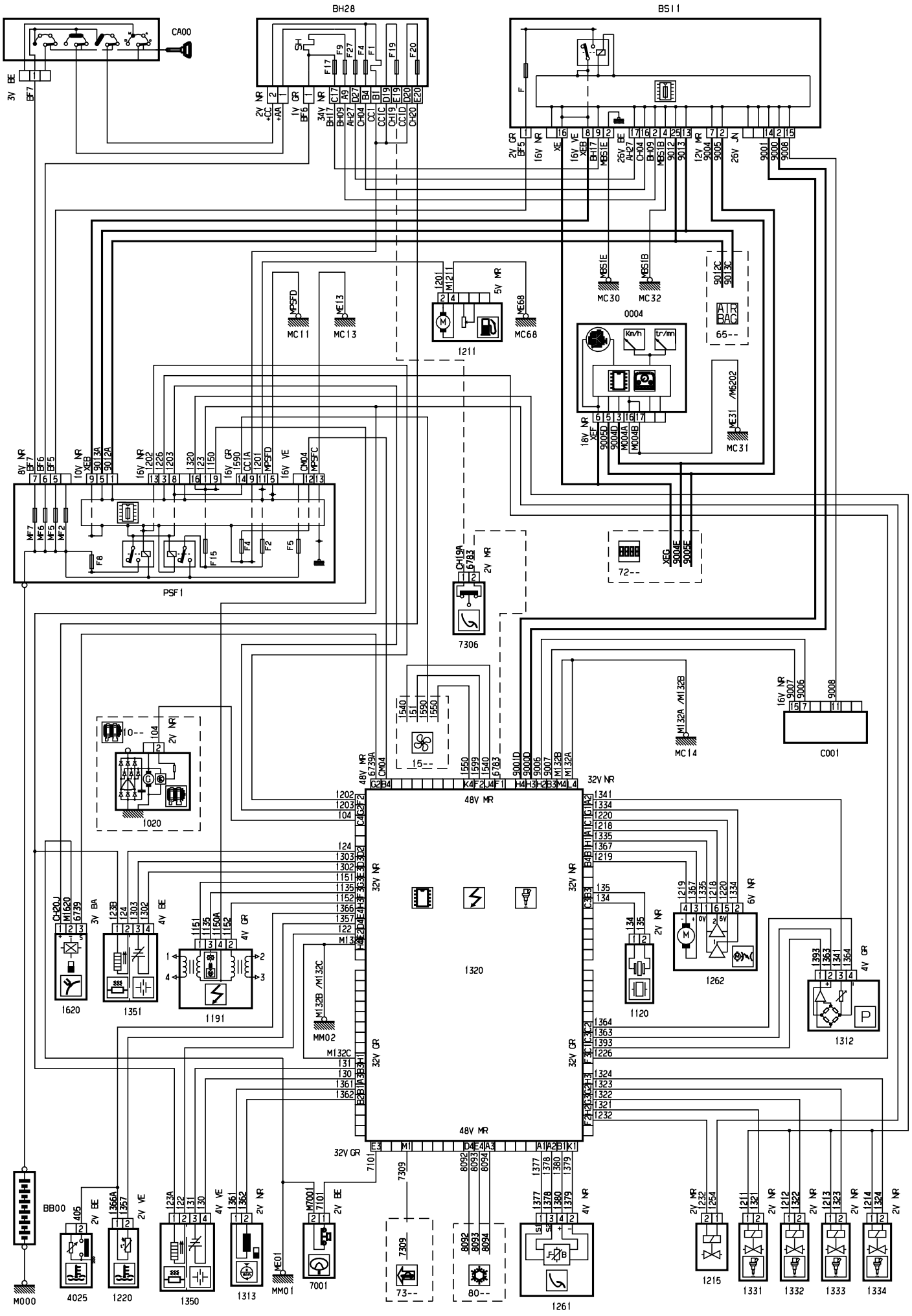
BH28
BS11
CA00
PSF1
1211
MC11
MC13
MC68
MC30
MC32
0004
65--
MC31
72--
7306
1020
MC14
C001
1320
1620
1351
1191
MM02
1120
1262
1312
BB00
M000
4025
1220
1350
1313
MM01
7001
73--
80--
1261
1215
1331
1332
1333
1334
D3ARBKKR

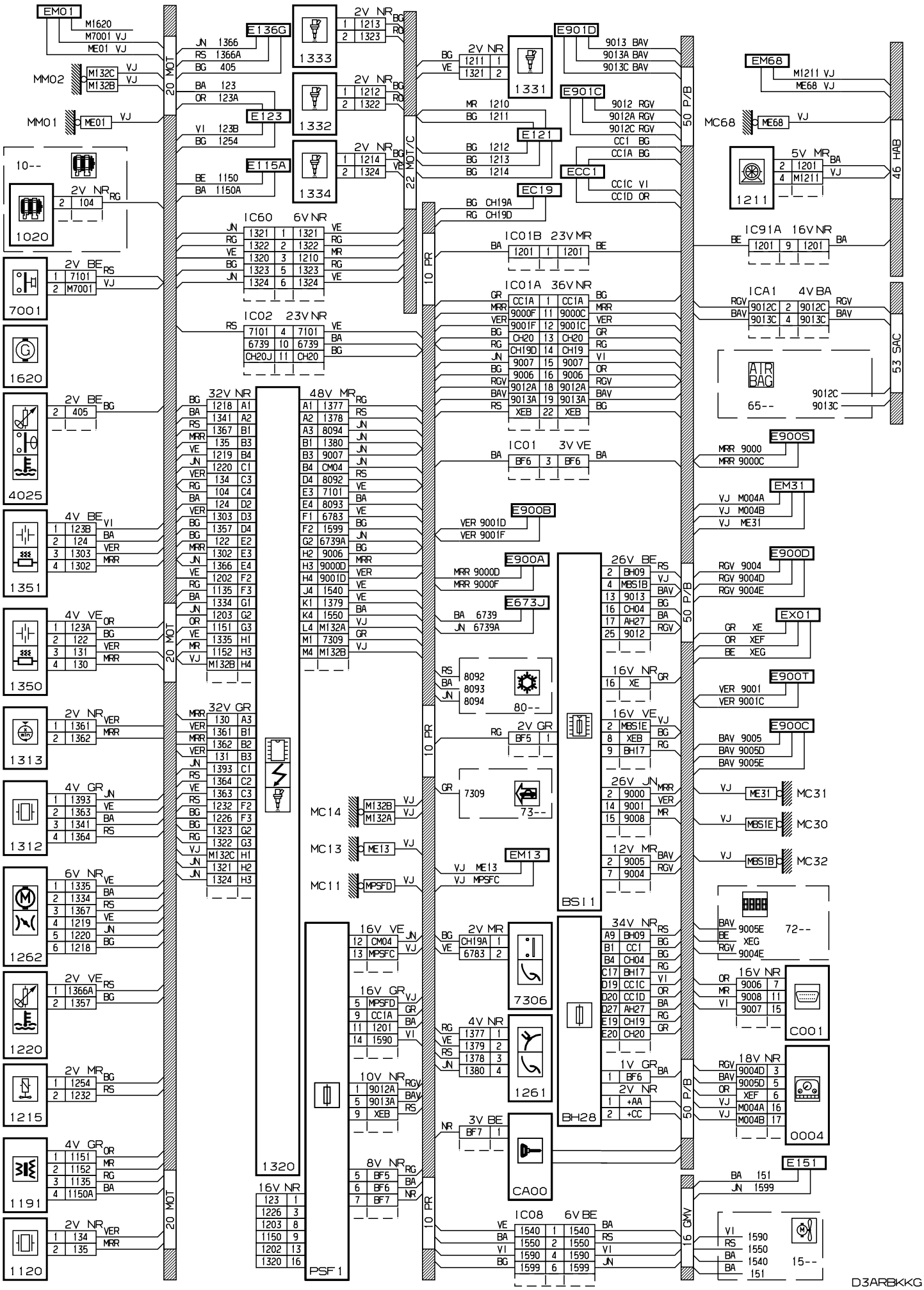
EM01
MM02
MM01
E136G
E123
E115A
1333
1332
1334
1020
7001
1620
4025
1351
1350
1313
1312
1262
1220
1215
1191
1120
20 MOT
22 MOT/C
10 PR
50 P/B
16 GMV
46 HAB
53 SAC
E901D
E901C
ECC1
EC19
E121
1331
1211
EM68
MC68
IC60 6V NR
IC02 23V NR
IC01B 23V MR
IC01A 36V NR
IC01 3V VE
IC91A 16V NR
ICA1 4V BA
ATR BAG
65--
E900S
EM31
E900B
E900A
E673J
E900D
EX01
E900T
E900C
80--
73--
EM13
MC14
MC13
MC11
MC31
MC30
MC32
BS11
BH28
7306
1261
CA00
1320
PSF1
C001
0004
72--
E151
15--
D3ARBKKG

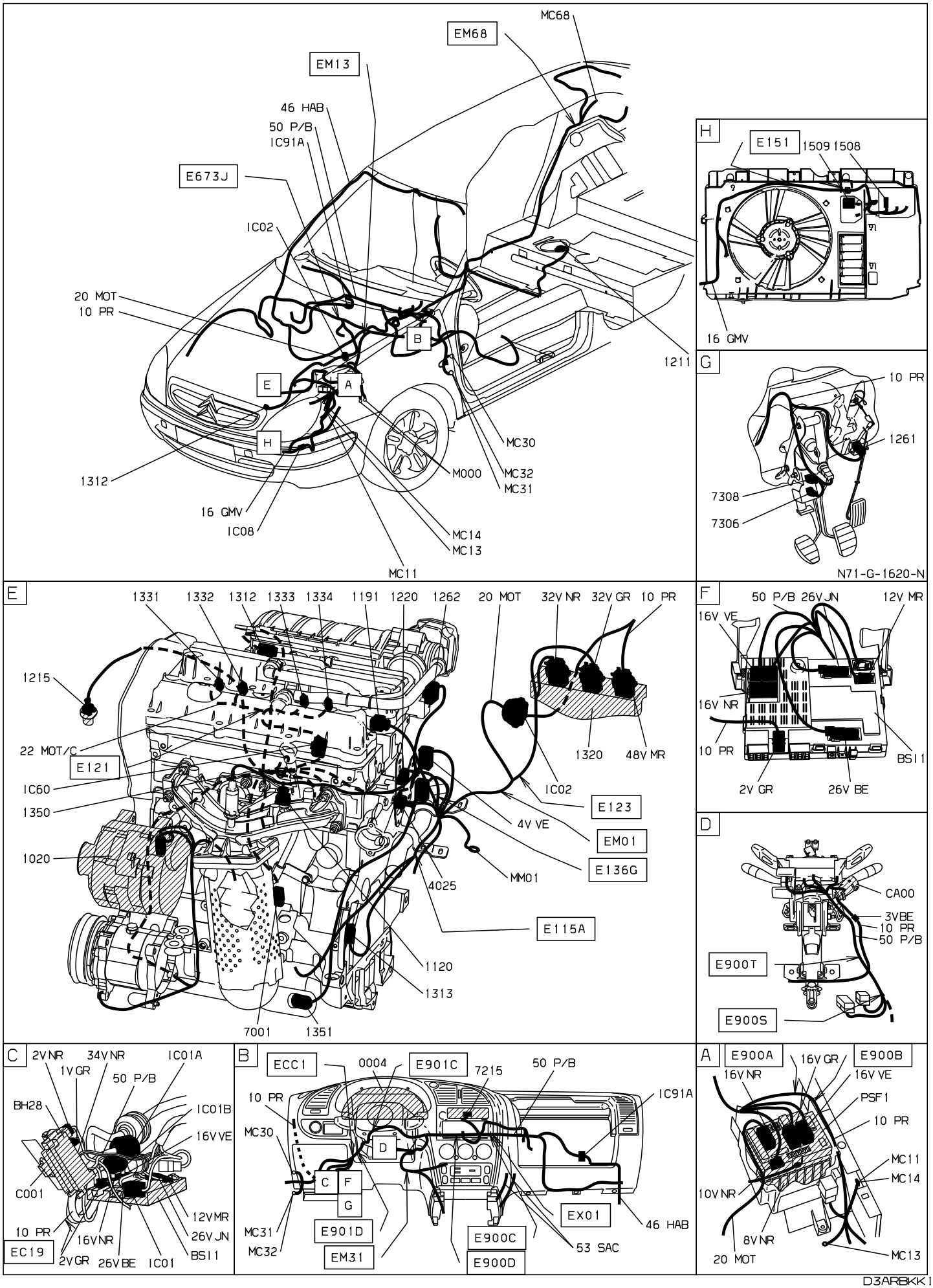
MC68
EM68
EM13
46 HAB
50 P/B
1C91A
E673J
1C02
20 MOT
10 PR
B
1211
E
A
H
MC30
1312
M000
MC32
MC31
16 GMV
1C08
MC14
MC13
MC11
H
E151
1509 1508
16 GMV
G
10 PR
1261
7308
7306
N71-G-1620-N
E
1331 1332 1312 1333 1334 1191 1220 1262 20 MOT 32V NR 32V GR 10 PR
1215
22 MOT/C
E121
1C60
1350
1020
1320 48V MR
1C02
E123
4V VE
EM01
E136G
MM01
4025
E115A
1120
1313
7001 1351
F
50 P/B 26V JN 12V MR
16V VE
16V NR
10 PR
BS11
2V GR 26V BE
D
CA00
3VBE
10 PR
50 P/B
E900T
E900S
C
2V NR 34V NR 1C01A
1V GR 50 P/B
BH28
1C01B
16V VE
C001
12V MR
10 PR
26V JN
16V NR
BS11
EC19
2V GR 26V BE 1C01
B
ECC1 0004 E901C 7215 50 P/B
10 PR
1C91A
MC30
D
C F
G
MC31
MC32
E901D
EM31
E900C
E900D
EX01
46 HAB
53 SAC
A
E900A 16V GR E900B
16V NR
16V VE
PSF1
10 PR
MC11
MC14
10V NR
8V NR
20 MOT
MC13
D3ARBKK I