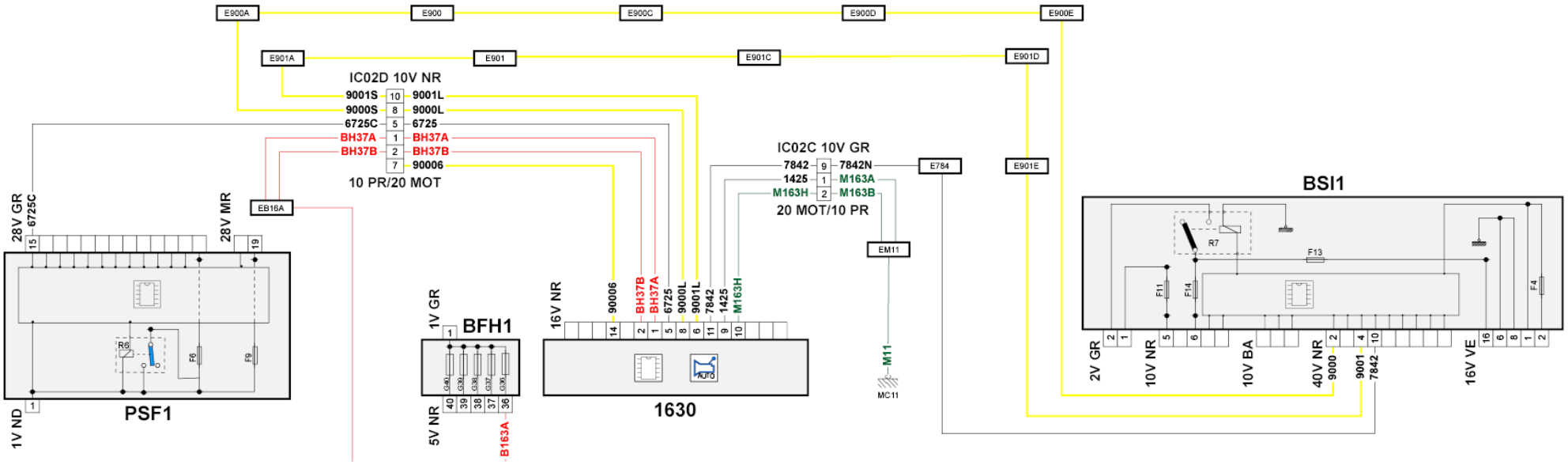
E900A
E900
E900C
E900D
E900E
E901A
E901
E901C
E901D
IC02D 10V NR
9001S 10 9001L
9000S 8 9000L
6725C 5 6725
BH37A 1 BH37A
BH37B 2 BH37B
7 90006
10 PR/20 MOT
IC02C 10V GR
7842 9 7842N
1425 1 M163A
M163H 2 M163B
20 MOT/10 PR
E784
E901E
EB16A
EM11
M11
MC11
28V GR
6725C
28V MR
15
19
R6
F6
F9
1V ND
1
PSF1
1V GR
BFH1
G40
G39
G38
G37
G36
40
39
38
37
36
5V NR
B163A
16V NR
90006
BH37B
BH37A
6725
9000L
9001L
7842
1425
M163H
14
2
1
5
8
6
11
9
10
1630
BSI1
R7
F13
F11
F14
F4
2V GR
10V NR
10V BA
40V NR
9000
9001
7842
16V VE
2
1
5
6
2
4
10
16
6
8
1
2